Datasheet M13V10I

Coriolis Mass Flow Controller for Gases

> Introduction

Bronkhorst Cori-Tech model M13V10I **mini CORI-FLOW™** Mass Flow Controllers (MFCs) for gases are precise and compact instruments, based on the Coriolis measuring principle, designed to cover the needs of the low flow market. The MFMs offer "multi-range" functionality: factory calibrated ranges can be rescaled by the user, maintaining the original accuracy specs. The instruments are equipped with a robust IP65 weatherproof housing and are optionally available with ATEX approval for use in Zone 2 hazardous areas. The MFC contains a microprocessor based pc-board with signal and fieldbus conversion and a PID controller for mass flow control by means of the integrated control valve. The mass flow is provided as analog signal or digitally via RS232 or optional fieldbus. The flow range and wetted materials are determined depending of the type of fluid and the process conditions of the application.

mini CORI-FLOW Coriolis Mass Flow Controller model for gases M13V10I

> Technical specifications

Flow ranges

Minimum full scale	: 50 g/h
Nominal flow	: 1000 g/h
Maximum full scale	: 2000 g/h
Minimum flow	: 1 g/h
Rangeability MFC	: ≥ 1:50

Performance

Mass flow accuracy gases	: ± 0,5% of rate
Repeatability	: ± 0,05% of rate ±1/2 (ZS* x 100/flow)% based on digital output
Warm-up time	: approx. 30 min. after power up
Zero stability (ZS)*	: < ±0,2 g/h
Density accuracy	: < ±5 kg/m^3
Temperature accuracy	: ±0,5 °C
Temperature effect**	: Zero drift: ±0,02 g/h/°C Span drift: ±0,001% Rd./°C Initial heating (at zero flow): ≤ 15°C
Mounting***	: Any position, attitude sensitivity negligible
Device temperature	: 0…70°C; for ATEX Cat.3, Zone 2 max. 50°C
Settling time, controller (<2% of setpoint)	: 1 s

* Guaranteed at constant temperature and for unchanging process and environment conditions.
** Depends on flow rate, heat capacity fluid, T amb., T fluid and cooling capacity.
*** To be rigidly bolted to a stiff and heavy mass or construction for guaranteed zero stability. External shocks or vibrations should be avoided.

Mechanical parts

Material (wetted parts)	: Stainless steel 316L or comparable
Sensor	: Single tube, DN 0.5
Process connections (welded)	: Compression type or face seal couplings
Internal seals	: Kalrez (plunger only)
Ingress protection (housing)	: IP65 (weatherproof)
Leak integrity	: Outboard <2x10^{-9} mbar l/s He
Pressure rating	: 100 bar

Electrical properties

Power supply	: +15…24 Vdc ±10% Max. ripple recommended: 50 mV tt
Power consumption	: max. 7 W
Analog output	: 0…5 (10) Vdc, min. load impedance > 2 kΩ; 0 (4)…20 mA (sourcing), max. load impedance < 375 Ω
Analog setpoint	: 0…5 (10) Vdc, min. load impedance > 100 kΩ; 0 (4)…20 mA, load impedance ~250 Ω
Digital communication	: Standard RS232; Options: Profibus-DP®, DeviceNet™, Modbus-RTU, FLOW-BUS

Electrical connections

Analog/RS232	: 8-pin DIN male
Profibus-DP	: bus: 5-pin M12 female; power: 8-pin DIN male
DeviceNet/Modbus/FLOW-BUS	: 5-pin M12 male

Although all specifications in this datasheet are believed to be accurate, the right is reserved to make changes without notice or obligation.

По вопросам продаж и поддержки обращайтесь:

Архангельск (8182)63-90-72
Астана +7(7172)727-132
Астрахань (8512)99-46-04
Барнаул (3852)73-04-60
Белгород (4722)40-23-64
Брянск (4832)59-03-52
Владивосток (423)249-28-31
Волгоград (844)278-03-48
Вологда (8172)26-41-59
Воронеж (473)204-51-73
Екатеринбург (343)384-55-89
Иваново (4932)77-34-06
Ижевск (3412)26-03-58
Иркутск (395) 279-98-46
Казань (843)206-01-48
Калининград (4012)72-03-81
Калуга (4842)92-23-67
Кемерово (3842)65-04-62
Киров (8332)68-02-04
Краснодар (861)203-40-90
Красноярск (391)204-63-61
Курск (4712)77-13-04
Липецк (4742)52-20-81
Магнитогорск (3519)55-03-13
Москва (495)268-04-70
Мурманск (8152)59-64-93
Набережные Челны (8552)20-53-41
Нижний Новгород (831)429-08-12
Новокузнецк (3843)20-46-81
Новосибирск (383)227-86-73
Омск (3812)21-46-40
Орел (4862)44-53-42
Оренбург (3532)37-68-04
Пенза (8412)22-31-16
Пермь (342)205-81-47
Ростов-на-Дону (863)308-18-15
Рязань (4912)46-61-64
Самара (846)206-03-16
Санкт-Петербург (812)309-46-40
Саратов (845)249-38-78
Севастополь (8692)22-31-93
Симферополь (3652)67-13-56
Смоленск (4812)29-41-54
Сочи (862)225-72-31
Ставрополь (8652)20-65-13
Сургут (3462)77-98-35
Тверь (4822)63-31-35
Томск (3822)98-41-53
Тула (4872)74-02-29
Тюмень (3452)66-21-18
Ульяновск (8422)24-23-59
Уфа (347)229-48-12
Хабаровск (4212)92-98-04
Челябинск (351)202-03-61
Череповец (8202)49-02-64
Ярославль (4852)69-52-93

Киргизия (996)312-96-26-47
Казахстан (772)734-952-31
Таджикистан (992)427-82-92-69

Эл. почта brk@nt-rt.ru || Сайт: http://bronkhorst.nt-rt.ru

> Model number identification

M13 V10I – A A A – NN – A – A

Mass Flow Meter
M13 Nominal flow 1000 g/h

Control Valve
V10I Gas flow control valve (nc) PN100

Communication (I/O)
A RS232 + Analog (n/c control)
D RS232 + DeviceNet (n/c control)
M RS232 + Modbus (n/c control)
P RS232 + Profibus-DP (n/c control)
R RS232 + FLOW-BUS (n/c control)

Analog output
A 0…5 Vdc
B 0…10 Vdc
F 0…20 mA sourcing
G 4…20 mA sourcing

Supply voltage
D + 15…24 Vdc

Connections (in/out)
11 1/8" OD compression type
22 ¼" OD compression type
33 6 mm OD compression type
77 ¼" Face seal female
88 ¼" Face seal male
99 other (e.g. 1/16" OD)

Internal seals
K Kalrez (FFKM)
Z Other (on request)

Material
S Stainless steel

> Coriolis principle of operation

Instruments of the **mini CORI-FLOW™** series are based on the *Coriolis effect:* a fluid flows through a uniquely shaped, single loop sensor tube, forming part of an oscillating system. Coriolis forces cause a variable phase shift, which is detected by sensors and fed into the integrally mounted pc-board. The resulting output signal is strictly proportional to the real mass flow rate. Coriolis mass flow measurement is fast, accurate and inherently bi-directional. The **mini CORI-FLOW™** features density and temperature of the fluid as secondary outputs.

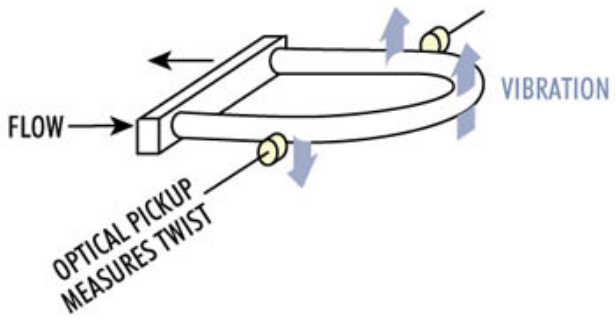

Schematic of a Coriolis flow sensor

> State of the art digital design

mini CORI-FLOW™ series are equipped with a digital pc-board, offering high accuracy, excellent temperature stability and fast response. The basic digital pc-board contains all of the general functions needed for measurement and control. In addition to the standard RS232 output the instruments also offer analog I/O. Furthermore, an integrated interface board provides DeviceNet™, Profibus-DP®, Modbus-RTU or FLOW-BUS protocols.

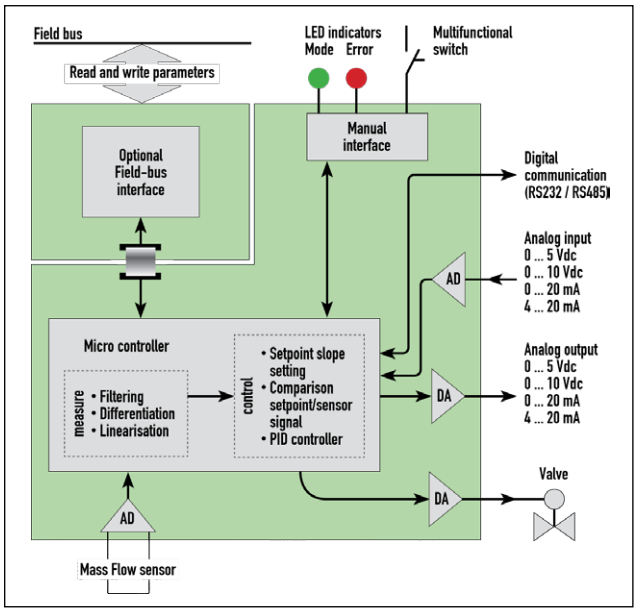

Functional scheme of the digital PC-board

> Hook-up diagram for analog or RS232 communication

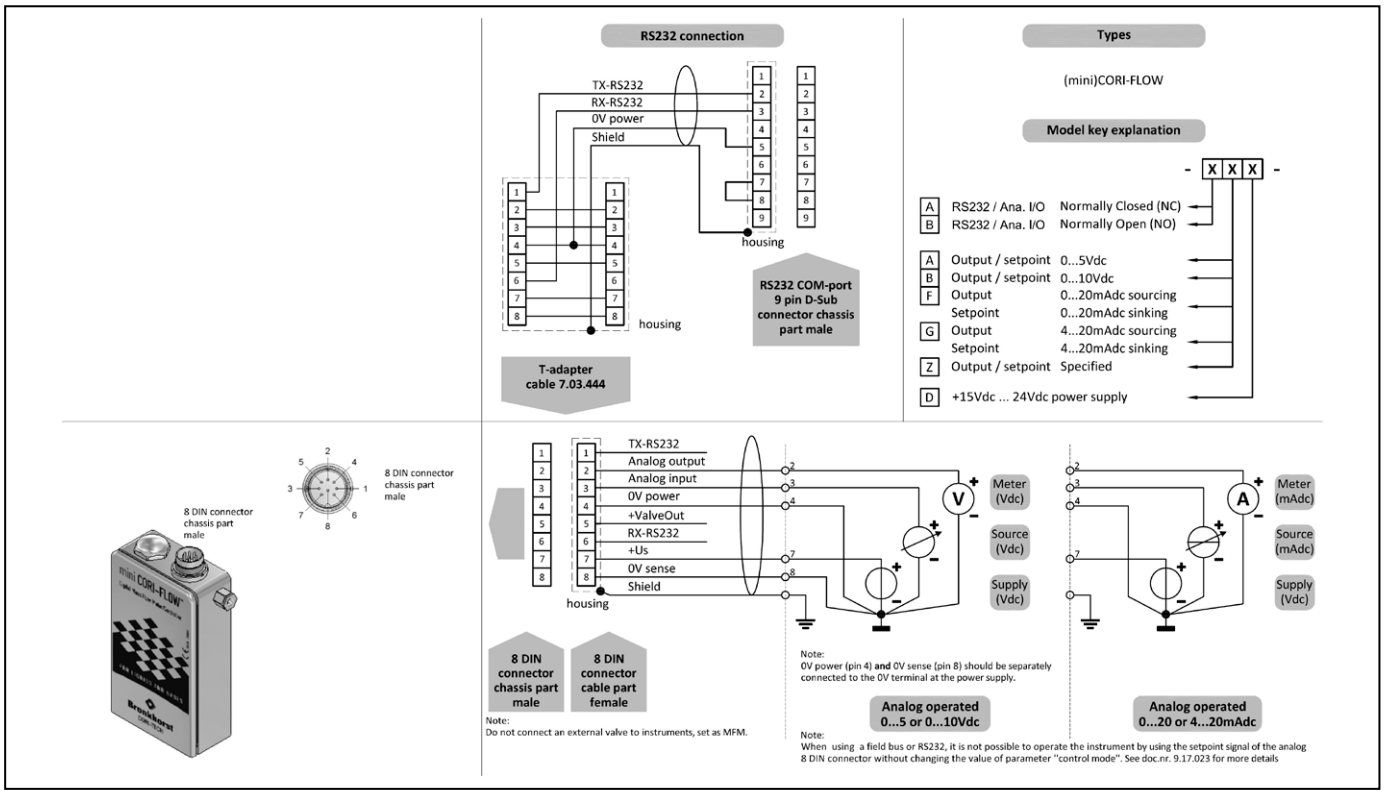

> Hook-up diagrams for fieldbus communication

Analog/RS232	Doc. 9.16.044
FLOW-BUS	Doc. 9.16.048
PROFIBUS	Doc. 9.16.049
DeviceNet	Doc. 9.16.050
Modbus	Doc. 9.16.066

> Dimensions (mm) and weight (kg)

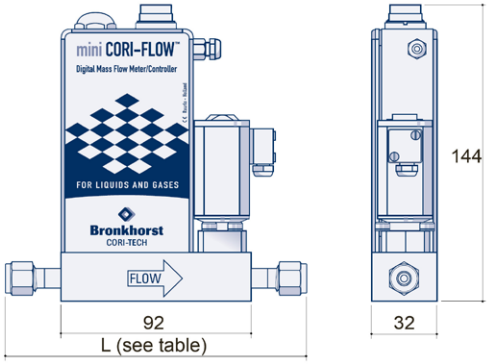

Weight: 1,5 kg

Length (L) including adapters

Compression type	Size L (in mm)
adapter 3 mm OD	144
adapter 6 mm OD	146
adapter 1/8" OD	143
adapter 1/4" OD	146

Face-seal male	Size L (in mm)
adapter 1/4"	124

> Options and accessories

- Free software support for operation, monitoring, optimizing or to interface between digital instruments and windows software.	
- BRIGHT compact local Readout/Control modules - E-5700 / E-7000 Power Supply	
- Interconnecting cables for power and analog/digital communication - PiPS Plug-in Power Supply	
- Heavy mass bodies and vibration-dampeners	
- Impact protection cover for ATEX Zone 2 applications	

> Alternatives

- Model M13 **mini CORI-FLOW™** Mass Flow Meter (flow rates from 1 upto 2000 g/h)	
- Model M13V11I **mini CORI-FLOW™** Normally Opened Mass Flow Controller (flow rates from 1 upto 2000 g/h) - Model M12V10I **mini CORI-FLOW™** Mass Flow Controller (flow rates from 0,1 upto 200 g/h) - Model M14V10I **mini CORI-FLOW™** Mass Flow Controller (flow rates from 0,03 upto 30 kg/h)	
- Model M13 **mini CORI-FLOW™** Mass Flow Meter with Dosing Pumps (flow rates from 1 upto 2000 g/h)	
- Model M13 **mini CORI-FLOW™** Mass Flow Meter with Pressure Actuated Valve (flow rates from 1 upto 2000 g/h)	

Архангельск (8182)63-90-72
Астана +7(7172)727-132
Астрахань (8512)99-46-04
Барнаул (3852)73-04-60
Белгород (4722)40-23-64
Брянск (4832)59-03-52
Владивосток (423)249-28-31
Волгоград (844)278-03-48
Вологда (8172)26-41-59
Воронеж (473)204-51-73
Екатеринбург (343)384-55-89
Иваново (4932)77-34-06
Ижевск (3412)26-03-58
Иркутск (395) 279-98-46
Киргизия (996)312-96-26-47
Казань (843)206-01-48
Калининград (4012)72-03-81
Калуга (4842)92-23-67
Кемерово (3842)65-04-62
Киров (8332)68-02-04
Краснодар (861)203-40-90
Красноярск (391)204-63-61
Курск (4712)77-13-04
Липецк (4742)52-20-81
Магнитогорск (3519)55-03-13
Москва (495)268-04-70
Мурманск (8152)59-64-93
Набережные Челны (8552)20-53-41
Нижний Новгород (831)429-08-12
Казахстан (772)734-952-31
Новокузнецк (3843)20-46-81
Новосибирск (383)227-86-73
Омск (3812)21-46-40
Орел (4862)44-53-42
Оренбург (3532)37-68-04
Пенза (8412)22-31-16
Пермь (342)205-81-47
Ростов-на-Дону (863)308-18-15
Рязань (4912)46-61-64
Самара (846)206-03-16
Санкт-Петербург (812)309-46-40
Саратов (845)249-38-78
Севастополь (8692)22-31-93
Симферополь (3652)67-13-56
Таджикистан (992)427-82-92-69
Смоленск (4812)29-41-54
Сочи (862)225-72-31
Ставрополь (8652)20-65-13
Сургут (3462)77-98-35
Тверь (4822)63-31-35
Томск (3822)98-41-53
Тула (4872)74-02-29
Тюмень (3452)66-21-18
Ульяновск (8422)24-23-59
Уфа (347)229-48-12
Хабаровск (4212)92-98-04
Челябинск (351)202-03-61
Череповец (8202)49-02-64
Ярославль (4852)69-52-93

Эл. почта brk@nt-rt.ru || Сайт: http://bronkhorst.nt-rt.ru